Specification-grade wet-location luminaire for wall mount applications.

- Machined 6061-T6 copper-free aluminum. Aluminum components are black anodized, then a polyester powder coat finish is applied.
- Seven standard TGIC powder coat finishes and clear anodized finish available.
- Remote transformer required.
- Stainless steel hardware.
- 10” 18ga. Teflon coated wire leads.
- Long flush lens cap holds 2 lens accessories.
- Three mounting plate options.
- Clear tempered glass lens, glued in.
- High-temperature silicone O-ring seal used to seal the cap against the body.
- Molded silicone wire pass-thru attached to socket wire prevents wicking and water leaking into the lamp compartment.
- Listed for wet location use.
- Warranty: 10 Years.

Mounting Plate Options:

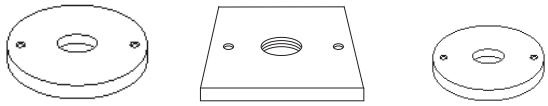

4/0 Round 5” dia. | 4/0 Square 5” Square | 3/0 Round 4” dia.

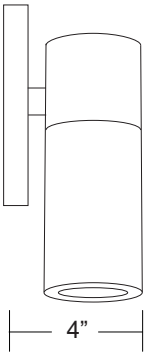

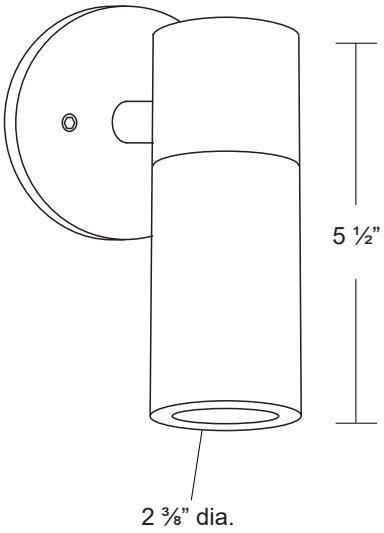

Made in USA

c UL us LISTED

Specifications

MODEL:	WA-3
MATERIAL:	6061-T6 Aluminum
VOLTAGE:	12V
WATTAGE:	50 watt, 8 watt LED
SOCKET:	GY-6.35 Bi-pin porcelain socket rated 600V, 250°C 18 ga, Teflon® coated leads.
LAMPING:	MR16 Halogen, 50W Maximum (order separately) 8W LED (order separately)
FINISHES:	BK - Black, BKT - Black Texture, BZ - Bronze, BZT - Bronze Texture, WT - White, SL - Silver, BG - Beige, CA - Clear Anodized

Ordering Logic:

MODEL	METAL	MOUNTING PLATE		FINISH	
WA - 3	A - Aluminum	1 - 4/0 Round	2 - 4/0 Square	BK - Black	BKT - Black Texture
		3 - 3/0 Round		BZ - Bronze	BZT - Bronze Texture
				WT - White	SL - Silver
				BG - Beige	CA - Clear Anodized

ORDERING EXAMPLE: WA - 3 - A - 1 - BK

Excelsior Lighting, Inc.

PROJECT

TYPE

2507 N. Bundy Drive Fresno, CA 93727 T - 559.346.1051 F - 559.346.1071 excelsiorlighting.com