UP LIGHT 12VAC/DC 9W LED MODULE MODEL UL-5L

Specification-grade landscape lighting, wet-location luminaire for up lighting or down lighting applications. Can be utilized for ground mounted, tree mounted or surface mounted installations.

- Machined 6061-T6 copper-free aluminum. Aluminum components are black anodized, then a polyester powder coat finish is applied.
- Seven standard TGIC powder coat finishes and clear anodized finish available.
- Adjustable LED Module: 2W, 4W, 6W, 9W. (12W startup draw)
- CRI = 85
- Available in 2700K, 3000K.
- Remote magnetic transformer required.
- Not compatible with electronic transformers.
- Stainless steel hardware.
- 10” 18ga. Teflon coated wire leads.
- 1/2” NPS Mount Threads (Mount not included).
- Tempered clear glass lens.
- 1/2” regressed lens cap holds 2 lens accessories.
- High-temperature silicone O-ring seal used to seal the cap against the body.
- Molded silicone wire pass-thru attached to socket wire prevents wicking and water leaking into the lamp compartment.
- Listed for wet location use.
- Warranty: 10 Years.

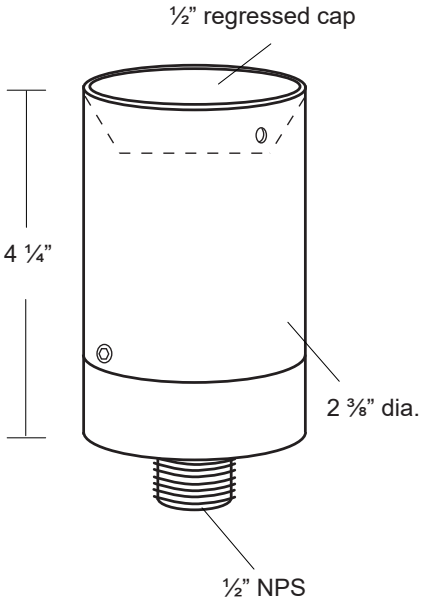

Made in USA

Specifications

MODEL: UL-5L

MATERIAL: 6061-T6 Aluminum

VOLTAGE: 12VAC/DC

WATTAGE: 2W, 4W, 6W, 9W

SOCKET: GY 6.35 Bi-pin porcelain socket rated 600V, 250°C 18 ga, Teflon ® coated leads.

LAMPING: 9W LED Module (12W Startup Draw)

Wattage	2700K	3000K
2W	165 lms.	190 lms.
4W	345 lms.	360 lms.
6W	515 lms.	530 lms.
9W	720 lms.	800 lms.

Ordering Logic:

MODEL	METAL	FINISH	
UL - 5L	A - Aluminum	BK - Black	BKT - Black Texture
		BZ - Bronze	BZT - Bronze Texture
		WT - White	SL - Silver
		BG - Beige	CA - Clear Anodized

ORDERING EXAMPLE: UL - 5L - A - BK - 52*

*See Module sheet to select module type to be installed

Excelsior Lighting, Inc.

PROJECT

TYPE

2507 N. Bundy Drive Fresno, CA 93727 T - 559.346.1051 F - 559.346.1071 excelsiorlighting.com

MR16 LED MODULES

Simply Better by Design™

9W MULTI-LEVEL - 2W, 4W, 6W, 9W (165-800 Lumens)

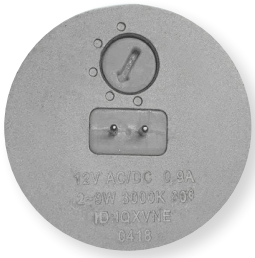

- Equivalent to MR16 20W/35W/50W/75W Halogen (equivalent CBCP)
- Four light levels, 2700K or 3000K
- 12VAC/DC
- 12W startup draw
- Interchangeable lenses: 15°, 30°, 45°, 60°
- Superior Light Output and thermal performance compared to LED Replacement Lamps
- Compatible with low-voltage magnetic transformers
- L70=60,000 hours
- 5 Year warranty
- FCC Compliant
- RoHS Compliant
- Pb Free
- Field Replaceable

#	Specifications	Lumens
50	2W - 9W, 2700K, 15°	165-720
51	2W - 9W, 2700K, 30°	165-720
52	2W - 9W, 2700K, 45°	165-720
60	2W - 9W, 2700K, 60°	165-720
53	2W - 9W, 3000K, 15°	190-800
54	2W - 9W, 3000K, 30°	190-800
55	2W - 9W, 3000K, 45°	190-800
61	2W - 9W, 3000K, 60°	190-800

Wattage	2700K	3000K
2W	165 lms.	190 lms.
4W	345 lms.	360 lms.
6W	515 lms.	530 lms.
9W	720 lms.	800 lms.

LENSES INCLUDED

15°

45°

30°

60°